OCULARIS

Ports and Communication Flow

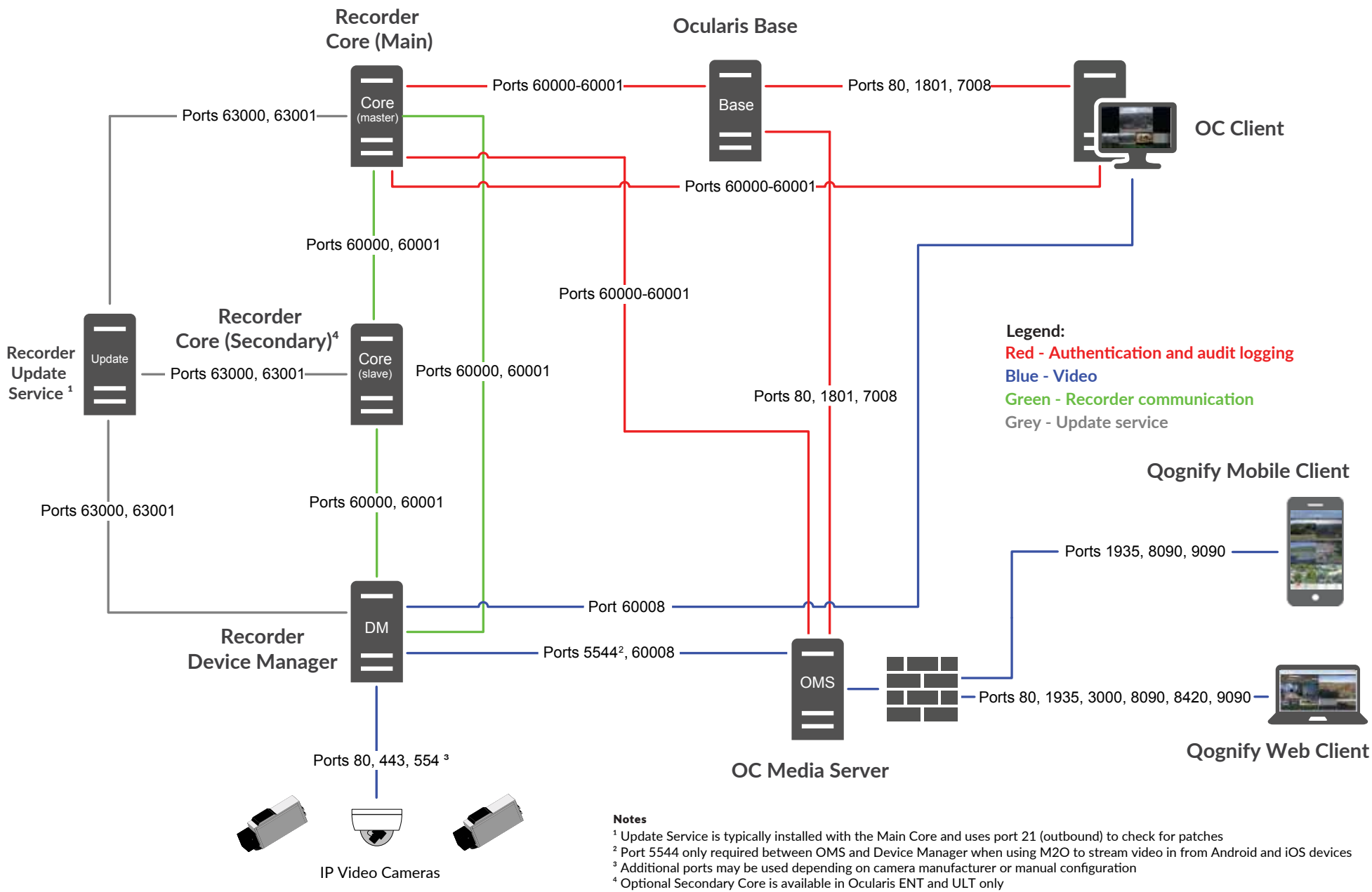

Notes

[1] Update Service is typically installed with the Main Core and uses port 21 (outbound) to check for patches
[2] Port 5544 only required between OMS and Device Manager when using M2O to stream video in from Android and iOS devices
[3] Additional ports may be used depending on camera manufacturer or manual configuration
[4] Optional Secondary Core is available in Ocularis ENT and ULT only

Q052-BR-EN-01 02/2021

OCULARIS

www.qognify.com

Qognify

© All rights reserved to Qognify Limited and its affiliates ("Qognify"). For the full list of Qognify's trademarks, please visit www.qognify.com/trademarks.
All other marks used are the property of their respective proprietor.